PROJECT REFERENCE NO.	SHEET NO.
B-4676A	2C-1

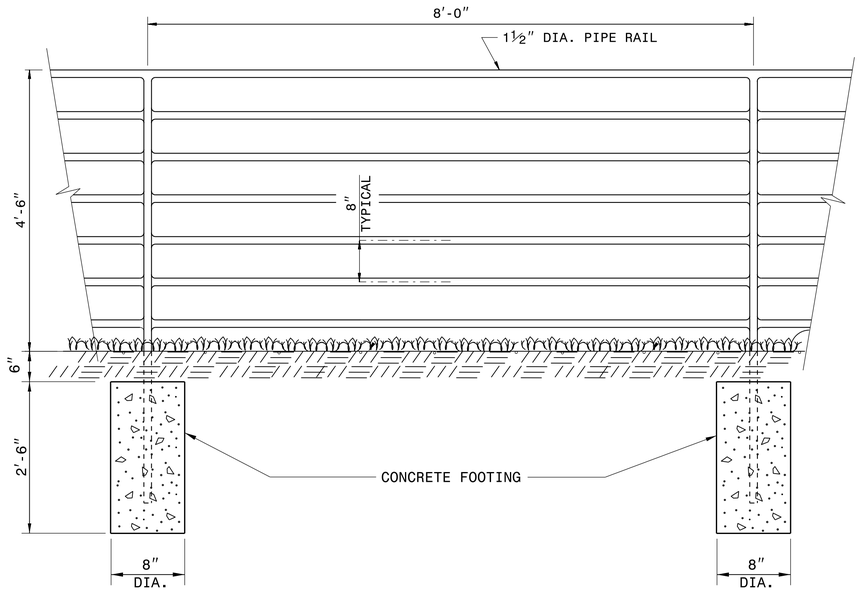

ELEVATION

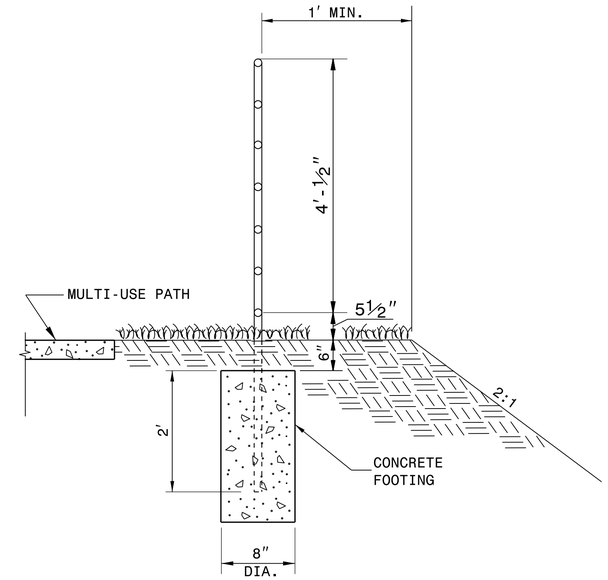

SECTION VIEW

NOTES:

CONSTRUCT PROPOSED STEEL PIPE RAIL OF 1½" DIAMETER SCHEDULE 40 PLAIN END GALVANIZED STEEL PIPE MEETING THE REQUIREMENTS OF ASTM A53.

REPAIR GALVANIZING IN ACCORDANCE WITH THE STANDARD SPECIFICATIONS SECTION 1076.

PAINT, IF REQUIRED BY THE ENGINEER, IN ACCORDANCE WITH THE STANDARD SPECIFICATIONS SECTION 1080.

WELD IN ACCORDANCE WITH ARTICLE 1072-18 OF THE STANDARD SPECIFICATIONS.

USE CLASS 'B' CONCRETE FOR HANDRAIL FOOTINGS.

PLACEMENT OF HANDRAIL IN RELATION TO SHOULDER BREAK POINT AND PATH MAY BE MODIFIED AS DIRECTED BY THE ENGINEER.

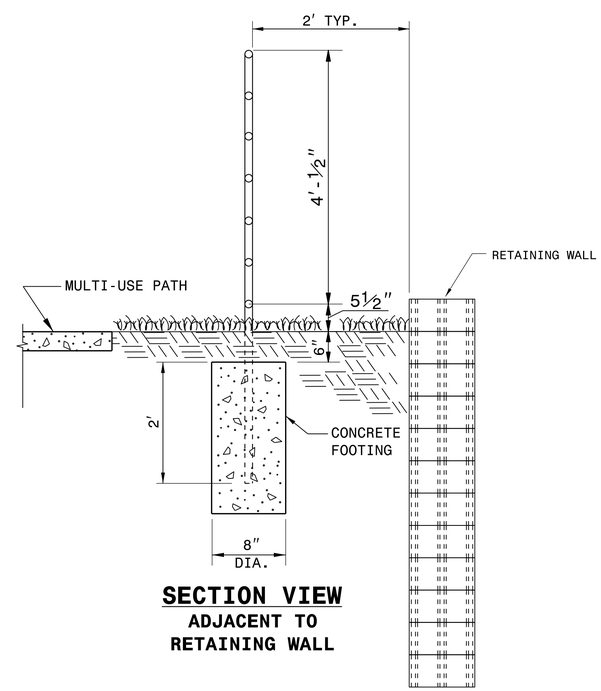

SECTION VIEW
ADJACENT TO RETAINING WALL

NORTH CAROLINA PROFESSIONAL ENGINEER SEAL 033144 NICOLE M. NICHOLS

DOCUMENT NOT CONSIDERED FINAL UNLESS ALL SIGNATURES COMPLETED

CONTRACT STANDARDS AND DEVELOPMENT UNIT
Office 919-707-6950 FAX 919-250-4119

BICYCLE / PEDESTRIAN SAFETY RAIL

ORIGINAL BY: _____ DATE: _____
MODIFIED BY: K.A. KEMPF DATE: 7-20-23
CHECKED BY: _____ DATE: _____
FILE SPEC.: details\kkempf\english\safety rails 2024.dgn

20-JUL-2023 12:36
safety rails 2024.dgn
kkempf AT CSD-320967